Communication Unit Supporting Code Scanner
WB9Z-CU100

User's Manual

B-1964(0)

IDEC CORPORATION

Introduction

Attention

- IDEC Corporation holds all rights related to this manual. Unauthorized duplication, reproduction, sales, transfers, or leasing without the express consent of IDEC is prohibited.
- Information contained in this manual may be changed or updated without notice.
- Every effort has been made to ensure the accuracy of the information contained in this manual. However, if you do note any errors or inconsistencies please contact the dealer from which you purchased the product or an IDEC sales representative.

Applicable Standards

This product is in compliance with the following standards:

- IEC/EN61000-6-1 (2007)
- EN61000-6-3 (2007)
- EN55032 (2012) Class B
- EN55024 (2010)
- UL60950-1, 2nd edition, 2011-12-19
- FCC Part15 SubpartB Class B (Verification)
- CSA C22.2 No.60950-1
- ICES-003 Class B (self-declared)
- VCCI Class B (compliance confirmed)

FCC Regulations

This device complies with Part 15 of the FCC Rules. Operation is subject to the following two conditions:

(1) This device may not cause harmful interference, and

(2) this device must accept any interference received, including interference that may cause undesired operation.

NOTE: This equipment has been tested and found to comply with the limits for a Class B digital device, pursuant to Part 15 of the FCC Rules. These limits are designed to provide reasonable protection against harmful interference in a residential installation. This equipment generates, uses and can radiate radio frequency energy and, if not installed and used in accordance with the instructions, may cause harmful interference to radio communications. However, there is no guarantee that interference will not occur in a particular installation. If this equipment does cause harmful interference to radio or television reception, which can be determined by turning the equipment off and on, the user is encouraged to try to correct the interference by one or more of the following measures;

- Reorient or relocate the receiving antenna.
- Increase the separation between the equipment and receiver.
- Connect the equipment into an outlet on a circuit different from that to which the receiver is connected.
- Consult the dealer or an experienced radio/TV technician for help.

Canadian Dpartment of Communications Compliance Statement

- CAN ICES-3(B) / NMB-3(B)

For further details on any of the above standards, please contact your sales agent directly.

Version Information

It is version upgrade information of communication unit supporting code scanner. Check the main application version of the firmware and use it.
To check the version, refer to [No.7 Get version] on page 5-4 in [5. 4 List of Control Commands].

Fixes and Improvements	Main application version
	WB9Z-CU100
Initial release	A-001.000.00

General terms, abbreviations, and terminology used in this manual

The general terms, abbreviations, and terminology used in this manual are as follows.

Item	Definition
Communication unit	Indicates "WB9Z-CU100".
PoE	Stands for Power over Ethernet. Technology to supply power using Ethernet cables.
Receive buffer	This is a storage area for temporarily storing received data.
Transmit buffer	This is a storage area for temporarily storing data before transmission.
Control character	ASCII code 00H - 1FH, 7FH. In this document, ▢ is used for expressing these values. For details, refer to [5. 6 ASCII Code Table] on page 5-6.
Prefix	This is character data attached to the beginning of output data or a communication command.
Suffix	This is character data appended to the end of output data or a communication command.
Our website	www.idec.com/

Graphic Symbol Glossary

This manual uses the following graphic symbols to simplify explanations:

Notes

Graphic Symbol	Description
⚠ **Warning**	Failure to operate the product in accordance with the information provided may result in severe personal injury or death.
⚠ **Caution**	Failure to operate the product in accordance with the information provided may result in personal injury or damage to equipment.
	Notes information that should be carefully noted. Failure to operate the product in accordance with the information provided may affect the appearance and performance of the main unit as well as any peripheral devices.
	Denotes additional information that may prove useful for using a given function.

SAFETY PRECAUTATIONS

- Please read this manual thoroughly before installing this product, wiring, operation, maintenance and inspection.
- In this manual, the degree of danger that is expected if the equipment is improperly used is categorized as "warning" or "attention". The meaning of each is as follows.

⚠ Warning	Incorrect handling may result in death or serious injury.

⚠ Caution	Incorrect handling may result in personal injury or property damage.

Safety Precautions

⚠ Warning	• This product is not intended for use in applications requiring high reliability and safety such as medical equipment, nuclear power, railway, aviation, and passenger equipment. Do not use for these applications. • Pay attention to redundancy design and safety design so that there is no possibility of affecting human life even if it generates erroneous data when it is incorporated into a system that may affect human life such as medicine dose management • Never disassemble, repair, or remodel . There is a risk of causing a serious accident such as electric shock, breakage, fire, or malfunction. • When using a part of a general electrical workpiece or when this device is connected as such, use a power supply with a PSE mark that complies with the technical standards of the Electrical Appliance and Material Safety Law In particular, do not use the built-in power supply when this product is used in applications other than embedded equipment It may cause fire or electric shock. • This product is for general use electronic equipment Do not use it in situations where its malfunction or failure directly threaten human life. • Always turn off the power before wiring work, maintenance and inspection Failing to do so may cause electric shock or malfunctions.

⚠ **Caution**	• Do not connect a power supply or AC power supply outside the rated power supply voltage range. There is danger of explosion or burnout. • Faulty wiring may cause damage to the internal circuit.Refer to the connection example of ☞ [2. 3. 1 Connecting the scanner port] on page 2-3 for wiring the input/output circuit. Also, since this product does not incorporate a power supply reverse connection protection circuit. • If the power supply is reverse connected, it may be damaged. Be careful when connecting a power supply. • Avoid parallel wiring in the same piping and conduit with high voltage lines and power lines (especially inverter power lines), which may cause a malfunction or damage due to induced noise. • If wiring is long, or if there is a risk of being affected by power source/electromagnetic interference from equipment etc., make solitary wiring the rule. • To guard against malfunctions or damage avoid installationin the following places: - Near induction equipment, sources of heat - Locations that experience mechanical vibration and shock impact - Dusty places - In an atmosphere of harmful gas such as that containing sulfur - Places where there is risk of water, oil, chemicals etc. contamination - Outdoors • Since this product is not an item intended to be explosion-proof, confirm that explosion-proof performance is unnecessary for installation.

Precautions during Use

⚠ **Caution**	• Use as shown in the catalog, in an environment as directed in this manual. High temperature, humidity, condensation, corrosive gas, excessive vibration. Using in a place subject to mechanical shock may cause electric shock, fire, malfunction. • The pollution tolerance degree for the usage environment of this product is "pollution degree 2". Comply with this requiremente (Based on standard IEC60664-1)

- **Since the power reset time is 1s, perform operations at least 1s after turning n the power.**
- **When starting for the first time, perform operations at least 3s after turning on the power.**
- When the load and the main unit are connected to different power sources, be sure to turn on the main unit power first.
- The rewrite frequency of the nonvolatile memory installed in the communication unit is 100,000 times.

Related Manuals

Related manuals are published on our website. Download and use the latest manuals from our website.
Please use this document together with the other manuals related to this communication unit as follows.

Model	Manual name	Contents
B-1964	Communication Unit Supporting Code Scanner WB9Z-CU100 User's Manual (this manual)	Gives an overview of the functions and capabilities of the communication unit as well as instructions on its use.
B-1945	Instruction Sheet: WB2F 2D Code Scanner	Included with the product.
B-1946	Instruction Sheet: WB9Z-CU100 Communication Unit	Included with the product.
B-1952	WB2F 2D Code Scanner User's Manual	Gives an overview of the functions and capabilities of the WB2F, and instructions on its use.
B-1960	WB2F 2D Code Scanner PLC Connection User's Manual	Explains about PLC Connection.
B-1962	WB2F 2D Code Scanner Menu Sheet	Explains about menu sheet.
B-1968	Communication Unit Supporting Code Scanner WB9Z-CU100 Support Tool Use's Manual	Included with the support tool for the communication unit. Explains about support tool.

Contents

1 Overview

This chapter describes the product components, names and functions of each part, and basic system configuration during operation.

1. 1 Checking the packaged product and the product configuration

The package of the Communication Unit contains the following components.
Before use, confirm that all the contents, body and accessories are present and free from damage.

Unit (WB9Z-CU100): 1

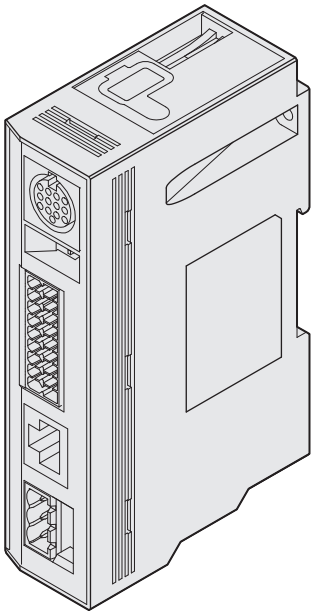

Connector for External Power Supply port: 1

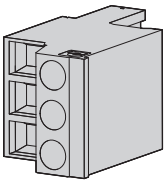

Connector for Input/Output/RS-232/RS-422 Port: 1

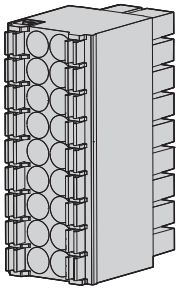

Instruction Manual: 1

1. 2 Part names and functions

Here describes the names and functions of each part in the Communication Unit.

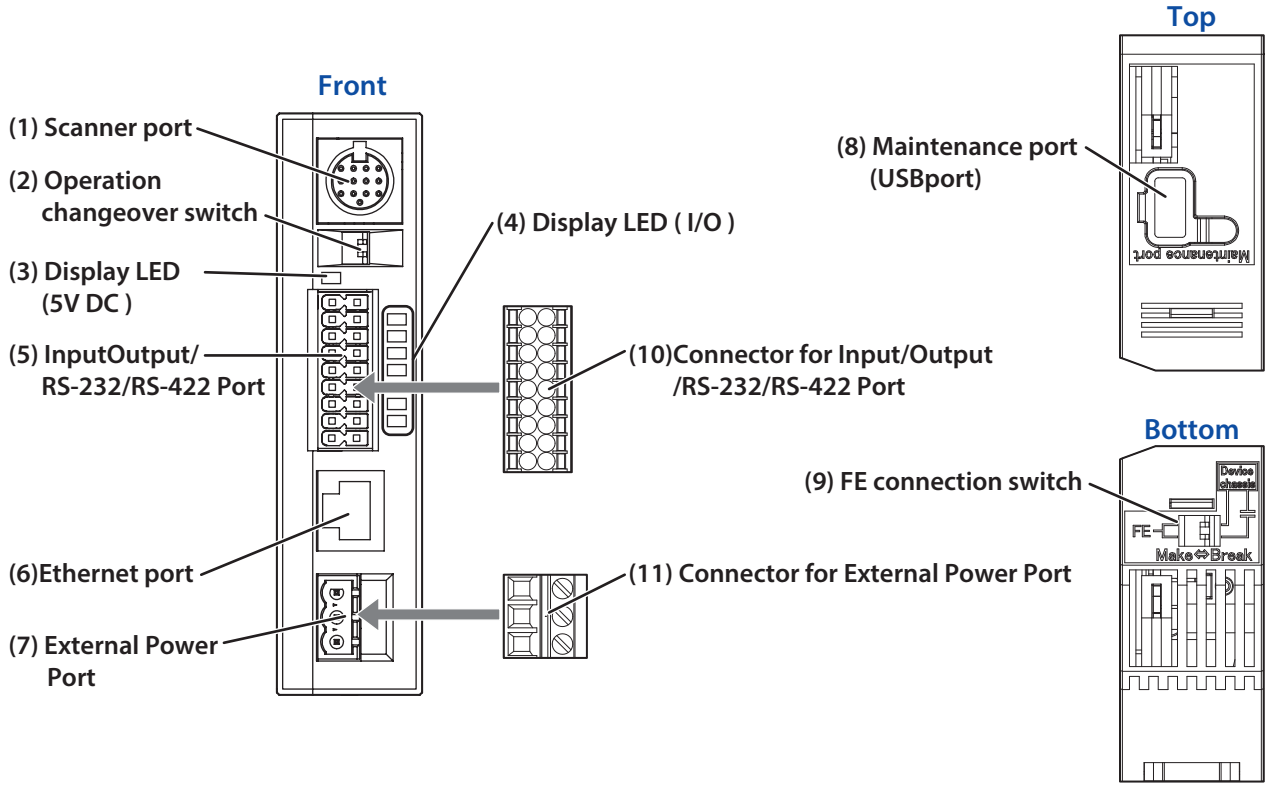

No.	Name	Function
(1)	Scanner port	The connector is a DIN type. It connects with the code scanner.
(2)	Operation changeover switch	Used to changeover operation mode.
(3)	Display LED (DC 5V)	Lights up (green) when power is on.
(4)	Display LEDs (I/O)	Green LED flash with External input and External output of WB2F.
(5)	Input/Output/RS-232/ RS-422 Port	The communication unit is connected with "Input/Output/RS-232/RS-422 Port".
(6)	Ethernet port	Will connect to a Ethernet Compatible device. PoE (Power over Ethernet) compatible.
(7)	External Power Port	The communication unit is connected with "External Power Port".
(8)	Maintenance port (USB port)	A port for maintenance using the USB interface. (USB2.0, Mini-B) For connection with host devices, use accessories or commercially available USB cables.
(9)	FE Connection switch	Enables switching the FE connection to the scanner.
(10)	Connector for Input/ Output/RS-232/RS-422 Port	• Terminal plug: DFMC1.5/9-ST-3.5 (manufactured by PHOENIX CONTACT) • It is used for control WB2F. • It is connected with equipment of RS-232/RS-422.
(11)	Connector for External Power Port	External Power Port Terminal plug: FRONT-MSTB2.5/3-ST-5.08 (manufactured by PHOENIX CONTACT)

Operation changeover switch

After setting the switches (SW1,SW2), turning the power ON can select the operation.
The relationship between the switches and the operation mode is as follows.
For the details of operation mode, refer to see [3. 1. 1 Operation mode] on page 3-1.

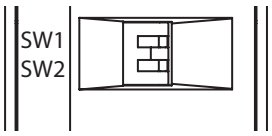

Operation changeover switch		Operation mode	Description
SW1	SW2		
OFF	OFF	Slave mode	A communication with Ethernet
ON	OFF	Slave mode	At communication with RS-232 or RS-422
OFF	ON	Maintenance mode	At maintenance
ON	ON	–	Not used

FE Connection Switch

Connection for shell of DIN connector and the FE terminal can be switched.
The relationship of the switches (1) and (2) and the connection method is as follows:

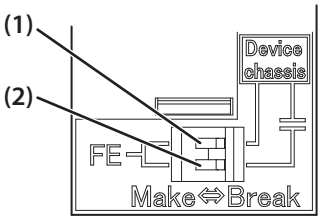

FE connection switch		Connection method	Remarks
(1)	(2)		
Make	Make	Direct connection	
Break	Make	Capacitive coupling	
Make	Break	Direct connection	Factory shipping status
Break	Break	No connection	

- Select the connection method depending on the noise environment.
- For the EMC Directive, the values are confirmed in the initial state ((1) : Make,(2) : Break) and performed self declaraion.

1.3 System configuration

The basic system configuration for using the Communication Unit is as follows:

System using Ethernet

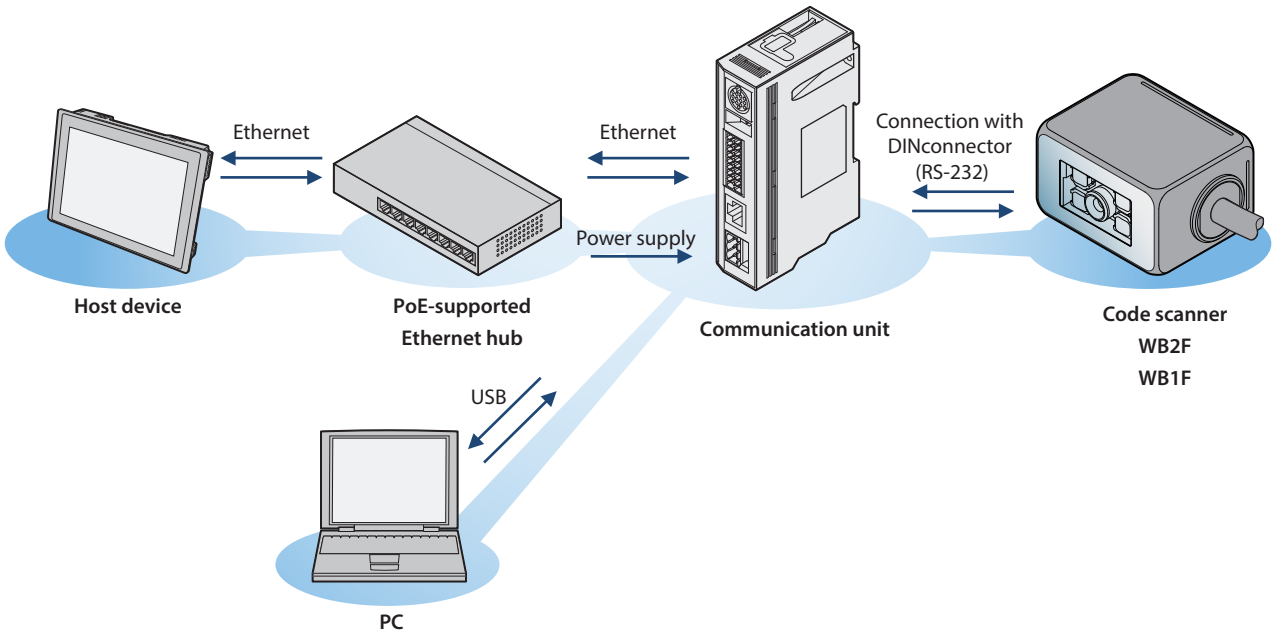

System without using Ethernet

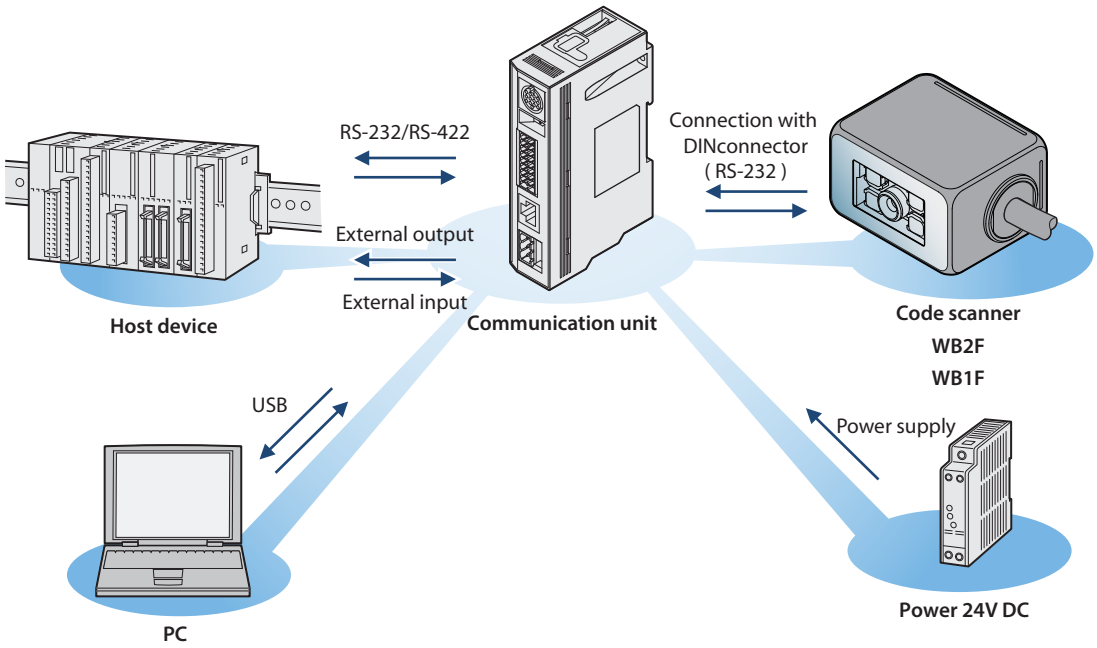

When connecting with PC via USB, the device driver must be installed. For how to install the device driver, Refer to [5. 7 Installing the USB driver] on page 5-8.

1.4 Accessories

Here describes the accessories for the Communication Unit.

● Accessories

USB Maintenance Cable
HG9Z-XCM42

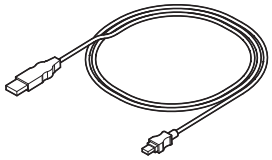

2 Installation & Wiring

Here explains the installation location and installation method of the communication unit and wiring with peripheral devices.

2. 1 Installation precautions

For installation of the communication unit, consider the operability, maintainability, environmental resistance adequately with reference to the figure below.

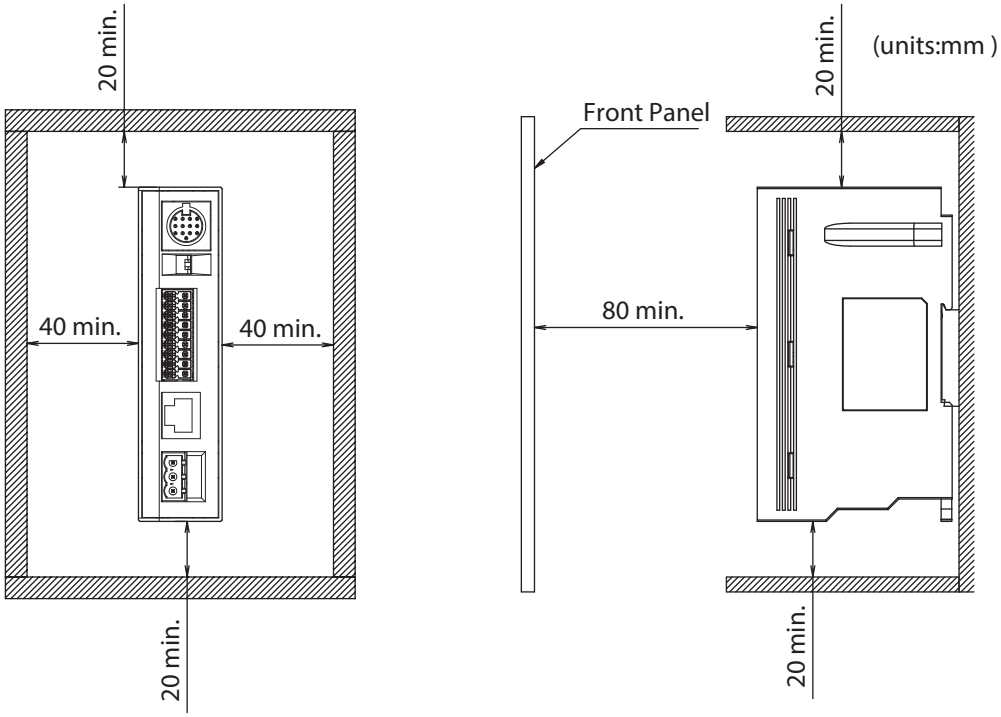

Do not install facing upward or downward.

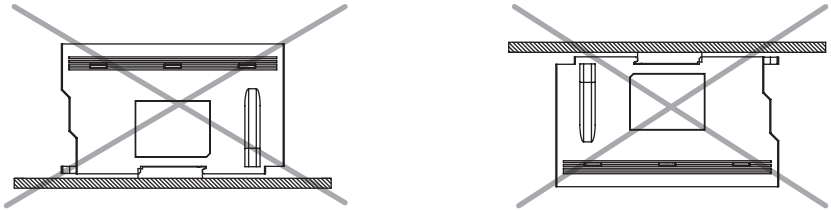

When using the maintenance port (USB port) after installation, consider operability and maintainability.

2. 2 Mounting methods

2. 2. 1 How to install on a DIN rail

Be sure to use a 35 mm wide DIN rail.

1. Hook the groove of the communication unit to the DIN rail.
2. Push the communication unit toward the DIN rail.

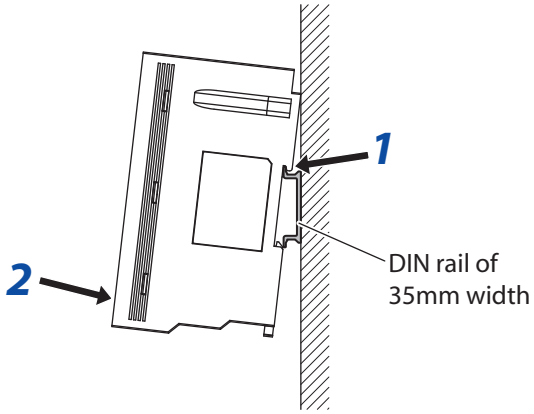

2. 2. 2 Direct panel-mounting method

1. Pull the DIN rail hook toward the outside of communication unit.
2. Align the screw mounting hole of the communication unit and that of the panel.
3. By using the M3 screws, install the panel
   In two positions. Torque: 0.4 to 0.5 Nm

(unit: mm)

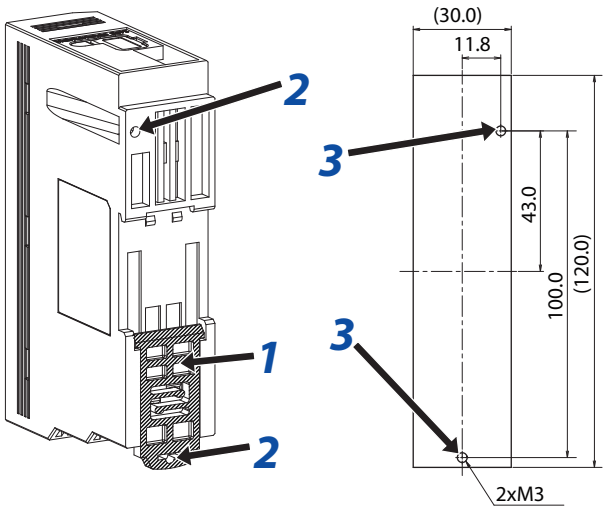

2. 3 Wiring

2. 3. 1 Connecting the scanner port

● Connecting the code scanner

The connection diagram between the communication unit and the code scanner is as follows.

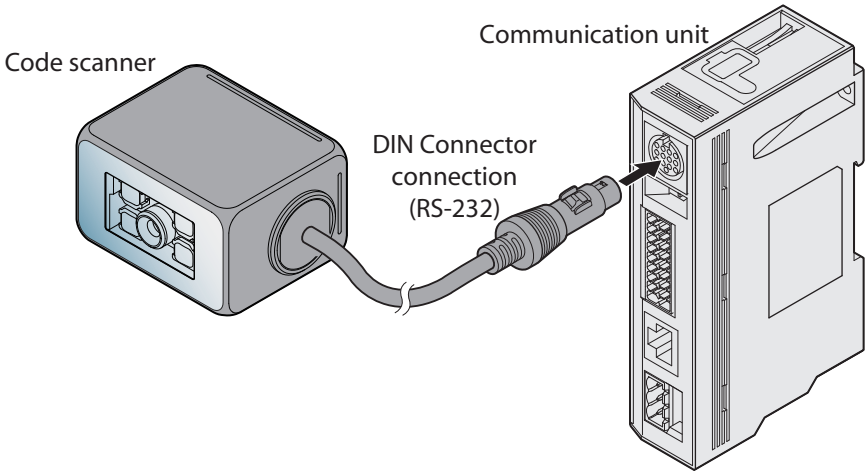

● Connector Pin Assignment

Communication Unit's connector pin assignment is as follows:

Scanner port

DIN connector

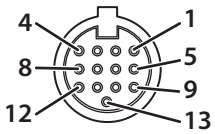

Pin Number	Description	Function
1	Out_0	Output from code scanner (NPN open collector)
2	Out_1	
3	Out_2	
4	Out_3	
5	DC 5V	Power supply for code scanner (+ V)
6	S_RD	Code scanner receive data (RS-232)
7	In_0	Input to code scanner
8	In_1	
9	0V	Power supply for code scanner (-V, SG common)
10	S_SD	Code scanner transmission data (RS-232)
11	S_RS	RS-232 control signal
12	S_CS	
13	0V	Power supply for code scanner (-V, SG common)

Input/Output/RS-232/RS-422 port

Connector for Input/Output/RS-232/RS-422 port

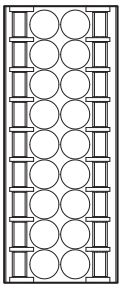

SDA	•	•	OUT_COM
SDB	•	•	OUT_0
RDA	•	•	OUT_1
RDB	•	•	OUT_2
SG	•	•	OUT_3
RD	•	•	IN_COM
SD	•	•	IN_0
CS	•	•	IN_1
RS	•	•	NC

Description	Function	Description	Function
SDA	RS-422 connection with host device	OUT_COM	Output from code scanner
SDB		OUT_0	
RDA		OUT_1	
RDB		OUT_2	
SG	SG for RS-232/RS-422 connection with host equipment	OUT_3	
RD	RS-232 connection with host equipment	IN_COM	Input to code scanner
SD		IN_0	
CS		IN_1	
RS		NC	Not used

External Power Port

Connector for an External Power Port

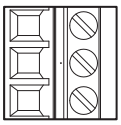

24V DC	•
0V	•
FE	•

Name	Function
24V DC	Power Supply (+V) for communication unit
0V	Power Supply (-V) for communication unit
FE	Functional ground for communication unit

2. 3. 2 Connecting the Power Supply

There are two types of power supply connection method.

- Using an external power supply
- Using PoE (Power over Ethernet)

● Using an Exernal Power Supply

Connect the 24V DC power supply adaptor to the communication unit's external power port.

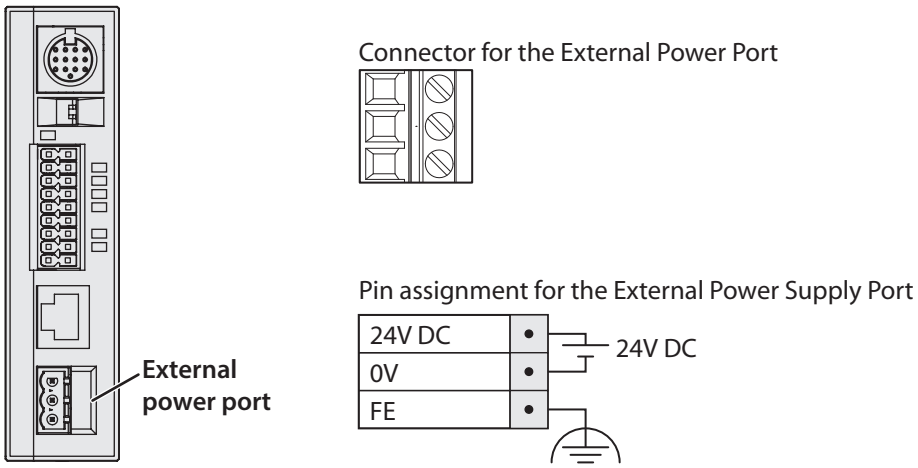

⚠ Caution	• Do not reverse the power supply connections under any circumstances. Doing so may result in damage. • Use the product within the rated power supply voltage range. Otherwise there is a risk of explosion or burnout.

- Always turn off the WB2F's power supply before wiring the product.
- Do not simultaneously use an external power supply and PoE.
- Use an AWG12 to 24 Cable for wiring.

- If using as a UL certified product, the external power source must be at most 24V DC, 8A, 100VA Limited Power Source or Class 2 Power Source.
- A normal type fuse rated 2.5A, 60V DC is built into the product.

● Using PoE

Connect the PoE to the Communication Unit's Ethernet Port. Even if using PoE, ground the FE terminal of the external power supply's port connector.

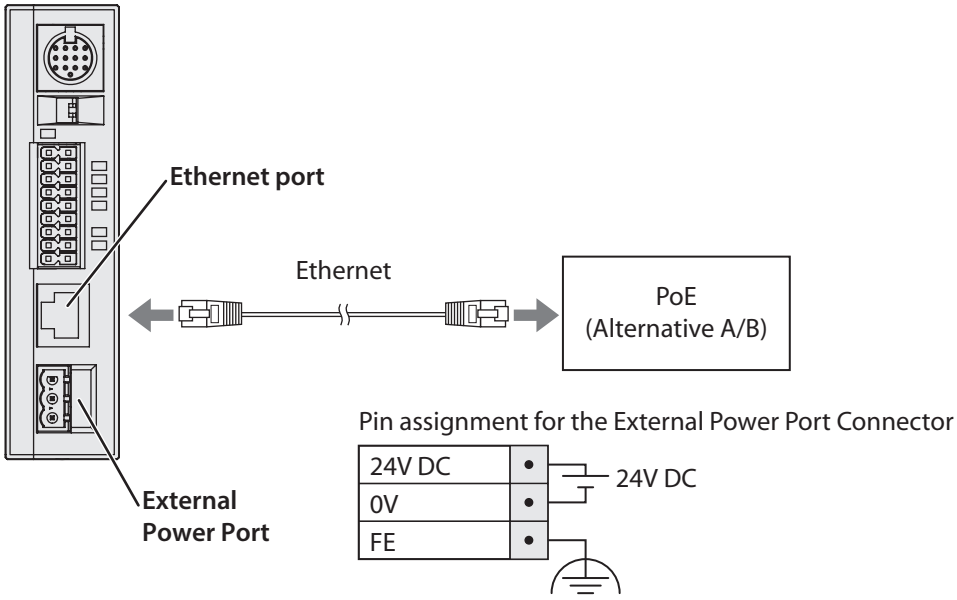

- Turn the communication unit's power to OFF prior to performing any wiring work.
- Do not simultaneously use an external power supply and PoE.

PoE is treated as Class 0.

2. 3. 3 RS-232 wiring

If connecting the code scanner to a host device such as programmable display or a computer using RS-232, do so according to the following wire instructions:

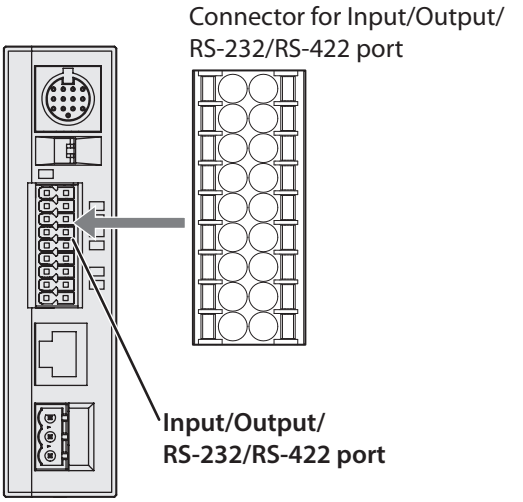

Host device

Description	Pin Number
RXD	2
TXD	3
RTS	7
CTS	8
GND	5
DCD	1
DTR	4
DSR	6
RI	9

D-sub 9-pin connector

Connector for Input/Output/
RS-232/RS-422 port

Description
SD
RD
CS
RS
SG

- Ethernet/RS-232/RS-422 cannot simultaneously use more than two types of communication.
- Use an AWG16 to 24 Cable for wiring.

2. 3. 4 RS-422 wiring

If connecting the code scanner to a host device such as programmable display or a computer using RS-422, do so according to the following wire instructions:

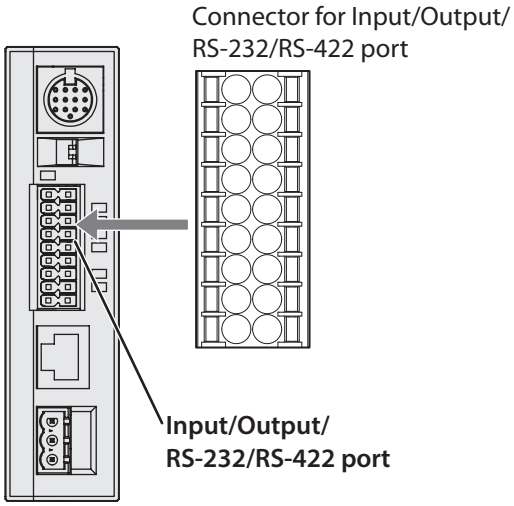

Host device

Description
RDA(RD+)
RDB(RD-)
SDA(SD+)
SDB(SD-)
SG

Connector for Input/Output/
RS-232/RS-422 port

Description
SDA(SD+)
SDB(SD-)
RDA(RD+)
RDB(RD-)
SG

- Ethernet/RS-232/RS-422 cannot simultaneously use more than two types of communication.
- Do not use a cable that is longer than 500m.
- If using a cable that is longer than 30m, use a shielded cable and connect the shield to the FE terminal. Wire the shield with sufficient consideration of the environment.
- Use an AWG16 to 24 Cable for wiring.

2. 3. 5 Wiring for Ethernet Communication

If connecting the code scanner to a host device such as programmable display or a computer using an ethernet connection, do so according to the following wire instructions:

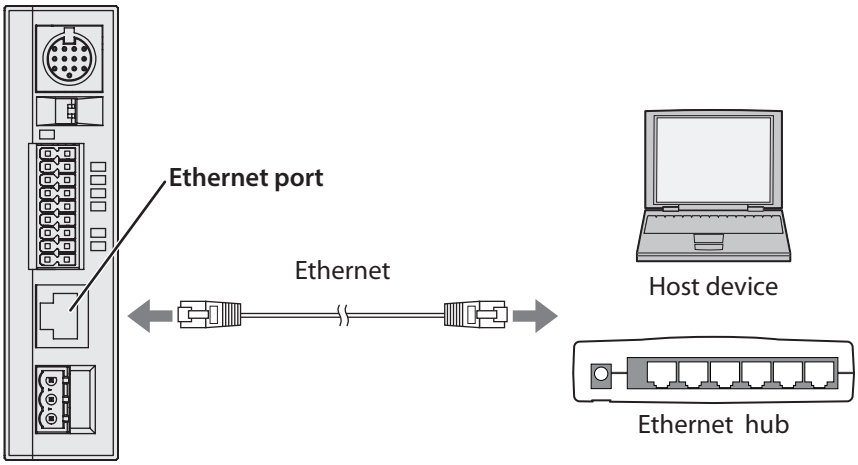

- Ethernet/RS-232/RS-422 cannot use more than two types of communication at once.
- Connect the PoE to the Communication Unit's Ethernet Port. Even if using PoE, ground the FE terminal of the external power supply's port connector.
- Use a cable rated over category 5.
- Do not use a cable that is longer than 100m.
- If using a cable that is longer than 30m use a shielded cable.

2. 3. 6 Wiring for External Input

External Input is a trigger input used to turn Read Request ON/OFF.
External Input will operate given the following voltage input (VIL:0-5V, VIH: 15-28.8V).
Refer to the following example prior to wiring the code scanner.

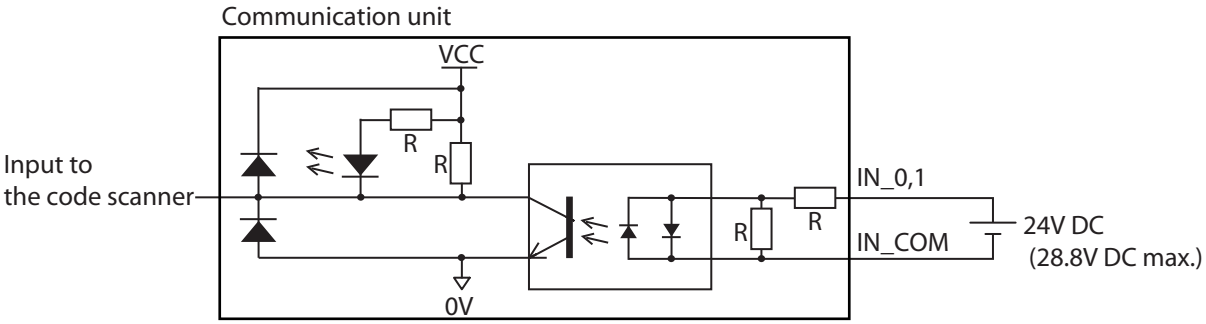

Caution	Miswiring may cause damage to internal circuitry.

Use an AWG16 to 24 Cable for wiring.

2. 3. 7 Wiring for External Output

External Output is used to determine read success/read failure during read operations.
Refer to the following example prior to wiring the code scanner.

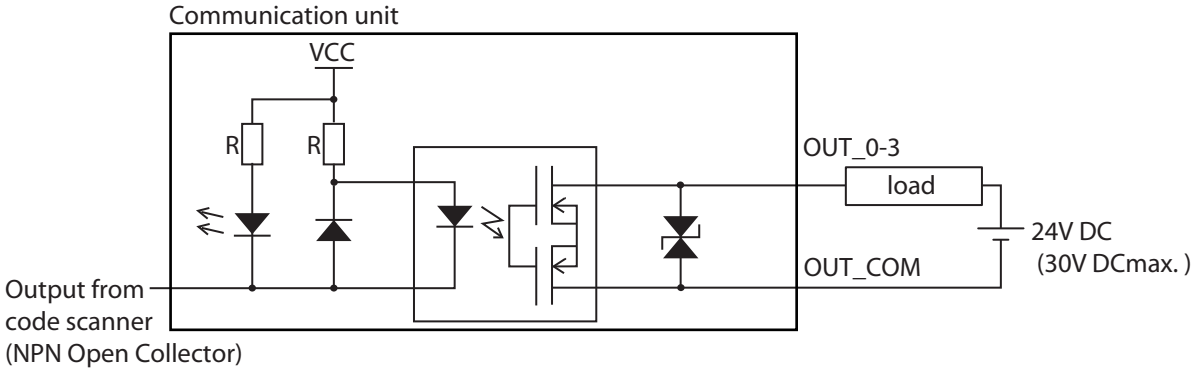

Caution	Miswiring may cause damage to internal circuitry.

- If the Load and the WB2F are connected to separate power supplies, make sure that you turn the WB2F's power on first.
- Use an AWG16 to 24 Cable for wiring.

2. 3. 8 Connecting the USB Cable

● USB connector pin assignment

USB connector is Mini-B (Female) type.

Pin number	Discription	Function
1	VBUS	bus power
2	D-	Data -
3	D+	Data +
4	ID	maintenance
5	GND	ground

USB Connector (Mini-B)

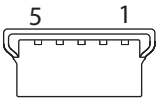

- The code scanner main unit can not be supplied with power from the USB connector.
- Do not use an On-the-Go cable. The ID pin is used internal circuit for maintenance.

● Connecting the USB connector

When connecting the unit to a host device, firmly insert the USB connector straight into the USB port on the host device in the correct orientation.

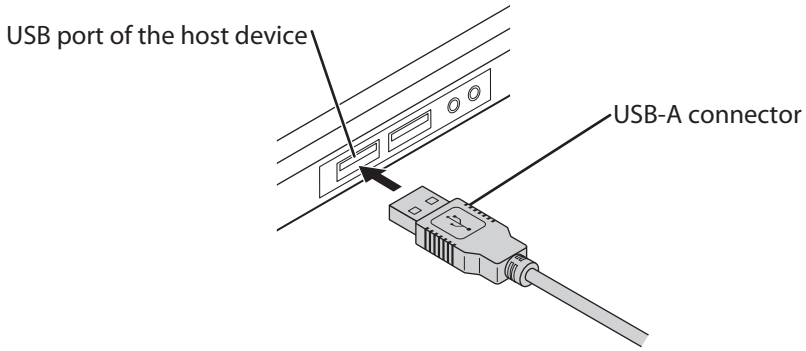

To connect the communication unit, open the cover of the maintenance port (USB port) and connect the USB Mini-B connector to the communication unit.
Insert straight, in the correct orientation to the maintenance port (USB port).

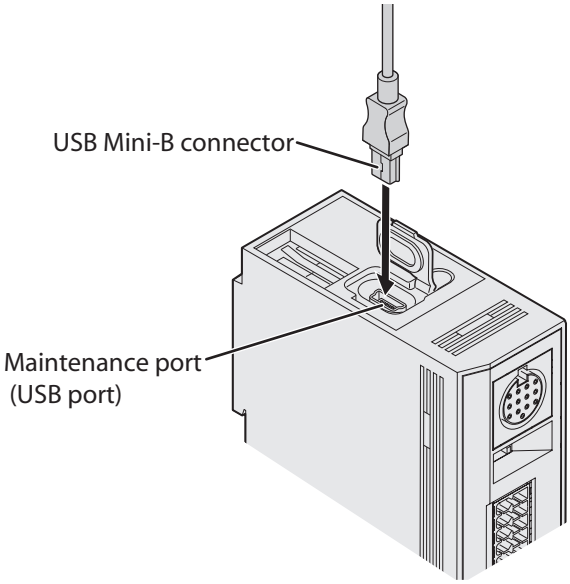

3 Function

This chapter describes the functions of the communication unit.

3. 1 Overview

3. 1. 1 Operation mode

Functions that can be executed depend on the operation mode of the communication unit.
There are two operation modes, Slave mode and Maintenance mode.

■ **Slave mode**

This mode is used during normal operation. Slave mode has the following functions:

Function	Contents	Reference page
TCP/IP server communication function	A function to transmit and receive data between the device connected to the scanner port and the device connected to the Ethernet port by operating the communication unit as a TCP/IP server.	☞ Page 3-3
RS-232/RS-422 communication function	A function where the communication unit is operated as an RS-232 repeater and RS-422 converter, and data is transmitted and received between a device connected to the scanner port and a device connected to the input/output/RS-232/RS-422 port..	☞ Page 3-4
Communication command function	Connected via communication interface of communication unit, this is a function to send and receive various data with the host device being used.	☞ Page 3-5

■ **Maintenance mode**

This mode is used for maintenance after installing the communication unit or for troubleshooting.Maintenance mode has the following functions:

Function	Contents	Reference page
Maintenance auxiliary function	A function that forcibly operates with the factory setting	☞ Page 3-8
Firmware version update function	A function to update firmware of communication unit	☞ Page 3-8

3. 1. 2 Operation mode function switching operation and state

Switch the operation mode and function using the operation changeover switch.
For the operation changeover switch, refer to the [Operation changeover switch] on page 1-3.

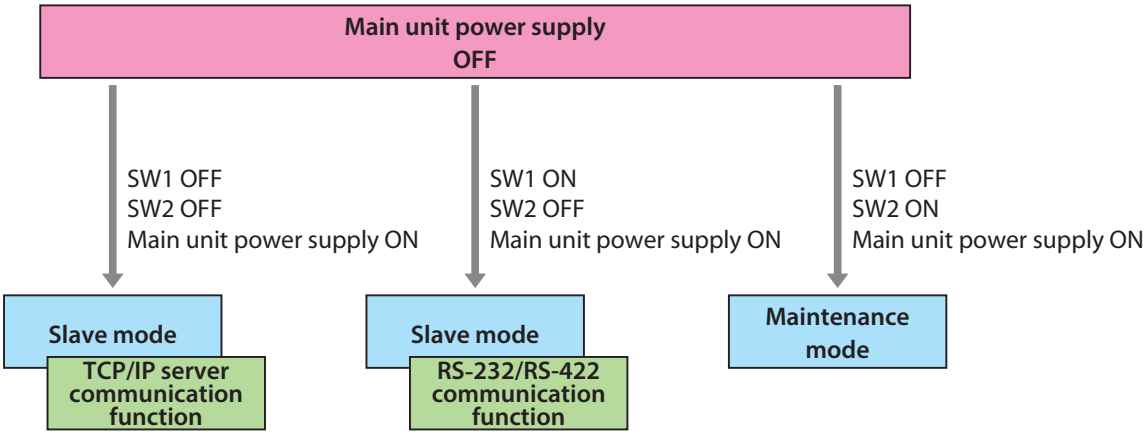

For details of each operation mode, refer to the following:

• Slave mode ..... Page 3-3
• Maintenance mode ..... Page 3-8

3. 2 Slave Mode

An operation mode to be used during normal operation. After installation, use in this mode.
Slave mode has the following functions:

3. 2. 1 TCP/IP server communication

A function to transmit and receive data between a device connected to the scanner port and a device connected to the Ethernet port by operating the communication unit as a TCP/IP server.

In the communication unit, only TCP/IP and RS-232 protocol conversion is performed.
No data part is processed here.

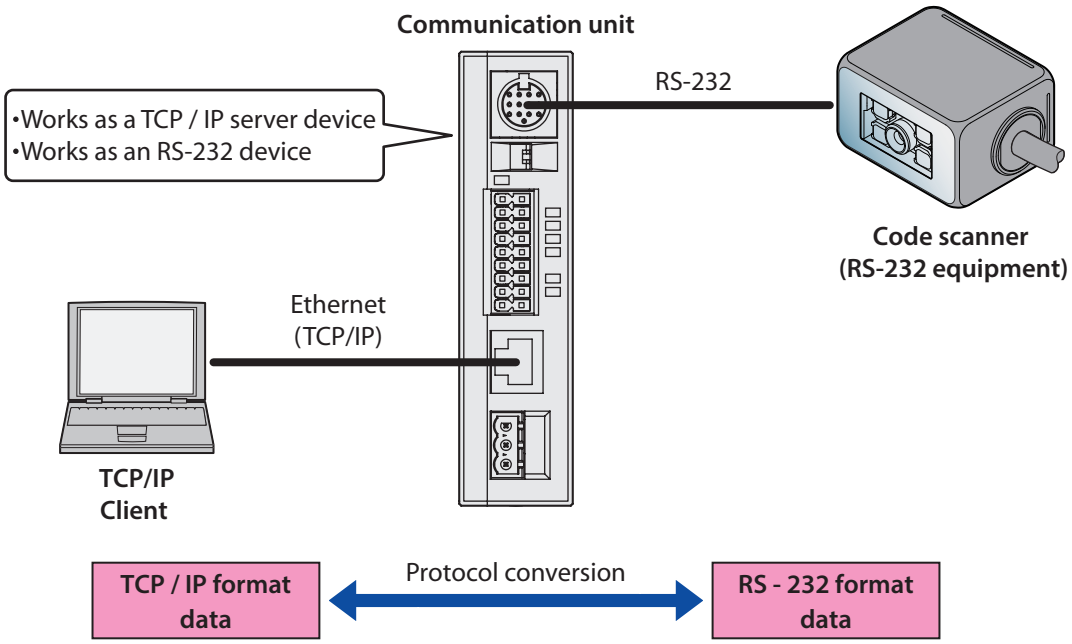

When using this function, do not connect anything to the Input/Output/RS-232/RS-422 port.

- Data received from the scanner port is transmitted from the Ethernet port when the following conditions are met.
  - 1024 bytes of data was stored in the receive buffer.
  - The specified time *1 has passed since the last time data was received.
    *1 The specified time varies depending on the setting value and the RS-232 communication speed.
- The transmission data from the equipment connected to the communication unit should be less than 1024 bytes per packet.

3. 2. 2 RS-232/RS-422 communication

The communication unit is operated as an RS-232 repeater and an RS-422 converter, and the equipment connected to the scanner port, is a device to send and receive data between devices connected to Input/Output/RS-232/RS-422 port.

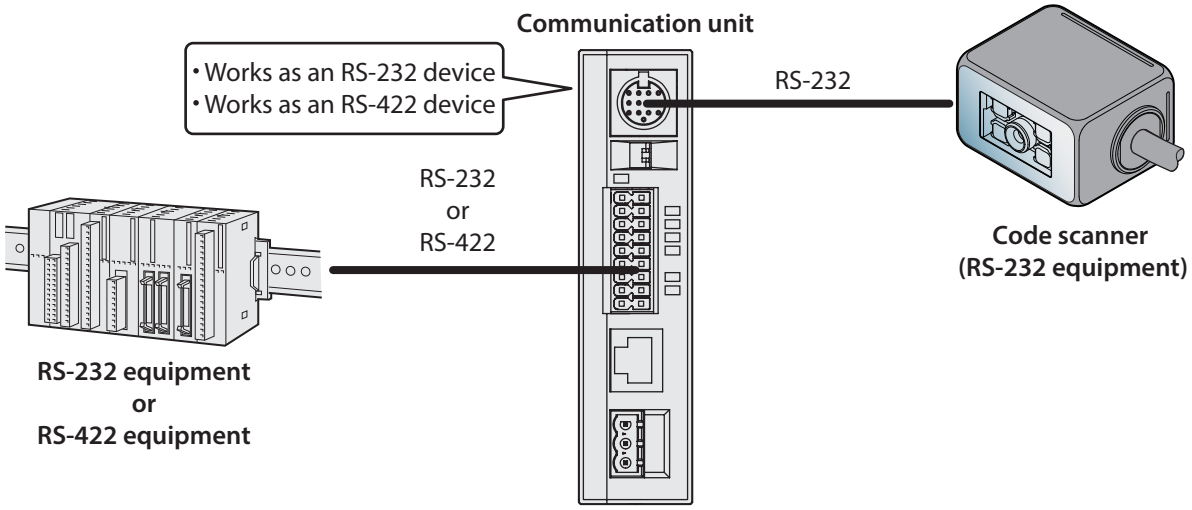

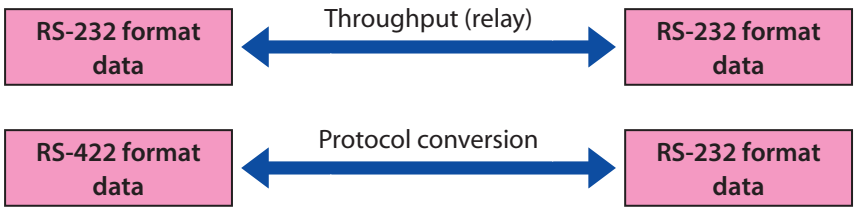

- Connect one of the RS-232 device and the RS-422 device to the Input/Output/RS-232/RS-422 port. You can not connect two at the same time.
- When using this function, do not connect anything to the Ethernet port.

3. 2. 3 Communication command function

The communication command function is a function to send and receive various data to the host device connected via the maintenance port (USB port) of the communication unit. The applications required to transmit/receive data are collectively called [communication command]. Communication Commands are composed of both Control Commands and Setup Commands.

■ Control command

Command to directly start up the communication unit. With this, you can execute operations such as obtaining Version information, initializing setting values, loading and saving.

■ Setup command

It is a command to change or acquire the setting value which defines how to operate the communication unit. You can change or retrieve the setting values of RS-232 communication and Ethernet communication.

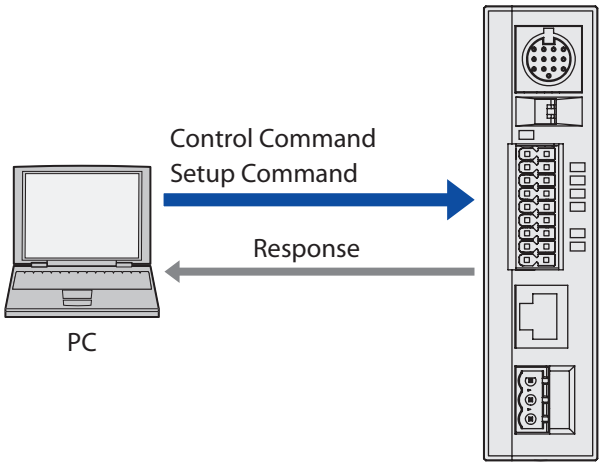

Communication Data Format: Regarding Prefix and Suffix

Excluding prefix and suffix, communication data formats of communication commands are text (ASCII format).

> **Notes on communication**
> Enter [prefix + suffix] if you suspect any of the following: the scanner is unused despite the power being on for a long period of time, the scanner appears to be receiving noise, or the scanner may be storing unncessary data in its reception buffer. This will clear the reception buffer.

● Control Command

You can control the communication unit by inputting the control command from the maintenance port (USB port) to the communication unit.
Control Command output format examples are as follows:

e.g. Transmitting Control Command "load setting value"

• Request (host device → communication unit)

Prefix	Mnemonic	Suffix
^	**load**	CR LF

• Response (communication unit → host device)

Normal Response

Prefix	Judge	Suffix
^	**OK-00**	CR LF

Abnormal Response

Prefix	Judge	Suffix
^	**NG-ff**	CR LF

- If an issue, such as the wrong command is input, occurs the response will become abnormal.
- For other commands, refer to [5. 4 List of Control Commands] on page 5-4.
- Control Command Response time (excluding "Save set value", "Set value initial") is within 100 ms. "Save set value", "Set value initial" is within 3 s.

● Setup Command

By entering the setting command from the maintenance port (USB port) to the communication unit, you can acquire and change the setting value.
Setup Command output format examples are as follows:

e.g. Obtain the settings for Address 8100 "RS-232 setting - communication speed".

• Request (host device → communication unit)

Prefix	Mnemonic	Address	Data type	Suffix
^	g	8100	x	CR LF

• Response (communication unit → host device)
Normal Response

Prefix	Mnemonic	Address	Data type	Data	Suffix
^	g	8100	x	03	CR LF

Abnormal Response

Prefix	Judge	Suffix
^	NG-ff	CR LF

e.g. Change the settings for Address 8100 "RS-232 setting - communication speed".

• Request (host device → communication unit)

Prefix	Mnemonic	Address	Data type	Data	Suffix
^	s	8100	x	07	CR LF

• Response (communication unit → host device)
Normal Response

Prefix	Judge	Suffix
^	OK-00	CR LF

Abnormal Response

Prefix	Judge	Suffix
^	NG-ff	CR LF

- If an issue, such as the wrong command is input, occurs the response will become abnormal.
- Address Range is 0000H-FFFFH (16bits, hex).
- Data Range is 00H-FFH (8bits, hex).
- Address at the time of request can be either lowercase or uppercase.
- The address and data at the time of response are lower case letters.
- For other settings, refer to [3. 4 Setting Item List] on page 3-9.
- Setup Command Response time is within 100 ms.

3. 3 Maintenance Mode

This mode is used for maintenance during operation after communication unit installation and to perform actions when problems occur.
Maintenance mode has the following functions.

• Maintenance Support ..... Page 3-8
• Firmware updating ..... Page 3-8

3. 3. 1 Maintenance Support

This is a function to temporarily operate the communication unit under the factory setting when any problem such as the communication with the host device is disabled after the setting was changed.

- The setting values are restored by turning the power on/off, resetting, or switching the mode.
- After switching Maintenance mode, you can restore the set value to the factory default state by executing the control command "set value initial". For the control command, refer to [5. 4 List of Control Commands] on page 5-4.

3. 3. 2 Firmware updating

This function updates the communication unit firmware.

- New functions that are added to the firmware can be used by executing a firmware version upgrade.
- The latest firmware is available on the IDEC website. Check whether or not there is new firmware on the IDEC website.

3. 4 Setting Item List

The settings and setting values that define the manner in which the communication unit operates are as follows.
You can define the customized operation of the communication unit for your environment by changing the setting values.

- When setting values are changed, the setting values must be saved with the "save setting values" control command.
- If the power is turned off, the unit is reset, or the operation mode is changed without executing "save setting values", the setting values are restored to the same values as before they are changed.
- Do not access or change any settings that are not listed here.
- Do not access or change any settings in reserved areas.
- There are three lines [external power supply/PoE/maintenance port (USB port)] power supply of communication unit.
- When turning off the power supply, it is necessary to shut off all three lines.

When configuring settings that specify ASCII code for the setting value, be aware of the following points.

- NUL (00H) cannot be used as a setting value.
- The characters up to the first NUL (00H) are considered the data and any data after that is not valid.

Setting value (hex) of bold face is default value (Setting at the time of factory shipments).

Item	Sub item	Address (hex)	Size (dec)	Default (hex)	Setting value (hex)	Remarks
Reserved		0000 - 01FF	256	-	-	
RS-232 setting	Communication speed	8100	1	03	00 : 1,200bps 01 : 2,400bps 02 : 4,800bps **03 : 9,600bps** 04 : 19,200bps 05 : 38,400bps 06 : 57,600bps 07 : 115,200bps 0a : 600bps	After saved, the settings are reflected when the power is turned on, the WB2F is reset, or the operation mode is changed.
	Data length	8101	1	01	00 : 7bits **01 : 8bits**	
	Parity	8102	1	01	00 : NONE **01 : EVEN** 02 : ODD	
	Stop bits	8103	1	00	**00 : 1bit** 01 : 2bits	
	Flow control	8104	1	00	**00 : NONE** 01 : CTS/RTS	
Reserved		8105 - 8201	29	-	-	
Ethernet setting	IP address	8202	4	64	00000000-FFFFFFFF : IP address	After saved, the settings are reflected when the power is turned on, the WB2F is reset, or the operation mode is changed. Initial value is 192.168.1.100
		8203		01		
		8204		A8		
		8205		C0		
	Default gateway	8206	4	01	00000000-FFFFFFFF : Default gateway	After saved, the settings are reflected when the power is turned on, the WB2F is reset, or the operation mode is changed. Initial value is 192.168.1.1
		8207		01		
		8208		A8		
		8209		C0		

Item	Sub item	Address (hex)	Size (dec)	Default (hex)	Setting value (hex)	Remarks
Ethernet setting	Subnet mask	820A	4	00	00000000-FFFFFFFF : Subnet mask	After saved, the settings are reflected when the power is turned on, the WB2F is reset, or the operation mode is changed. Initial value 255.255.255.0.
		820B		FF		
		820C		FF		
		820D		FF		
	TCP server port	820E	2	B8	0000-FFFF : port number	After saved, the settings are reflected when the power is turned on, the WB2F is reset, or the operation mode is changed. Initial value 3000
		820F		0B		
Reserved		8210 - 823F	48	-	-	
Optional network setting	RS-232 character timeout automatic setting	8240	1	01	00 : Disabled (manual) **01 : Enabled (auto)**	When Enabled (auto) is selected, data received on scanner port from Ethernet port, the time to transmit is automatically calculated from the RS-232 communication speed.
	RS-232 character Time out	8241	1	05	02 - FF : Setting value by 10 ms step (20ms to 2,550ms)	Enables to freely set the time to send data received on via scanner port to the Ethernet port.
Reserved		8242 - 827F	48	-	-	

4 Support Tool

This chapter describes the WB9Z-CU100 Support Tool.

4. 1 Overview

The WB9Z-CU100 Support Tool is a Windows application that can easily configure and check operation of the WB9Z-CU100. To use the WB9Z-CU100 Support Tool, please download the latest version from the IDEC website.
For details on the WB9Z-CU100 Support Tool, refer to the included documentation.

5 Appendix

This chapter describes communication unit specifications, troubleshooting, and List of Control Commands.

5. 1 Product Specification

Model		WB9Z-CU100
Power source for scanner		5V DC
Environmental Specifications	Ambient usage temperature	0 to +50 °C (no freezing)
	Ambient storage temperature	-20 to +60 °C (no freezing)
	Ambient usage humidity	30 to 85 % RH (no condensation)
	Vibration Resistance	10 to 55 Hz, Double amplitude: 0.3 mm
Protective construction		IP20
Electrical Specifications	Rated Operating Voltage*1	External power supply: 24V DC+10%, -20% (including ripple) or PoE (Alternative A/B)*5
	Consumption Current	700 mA max.
Weight		180 g approx.
Input Specifications	Input	2 circuits in 1 common line (IN_0, 1)
	Input Type	Bidirectional Voltage Input
	Rated input voltage	24 V DC (28.8 V max.)
	Input threshold voltage (ON)	15 V DC
	OFF Current	1.3 mA max.
Output Specifications	Output	4 circuits (OUT_0, 1, 2, 3)
	Output Type	Semiconductor Relay Output
	Rated load	24V DC (30V DC max, 100mA max.)
	Leakage current at OFF	0.1 mA max.
	Voltage drop	1 V max.
Communication Ports	Scanner port	RS-232 (600 - 115,200 bps)*3
	Ethernet port*4	IEEE802.3 compliant*2 10BASE-T/100BASE-TX Communication Protocol: TCP/IP (Server) Cable length: 100 m max. Use a shielded cable, when using a cable of 30 m long or more.
	Input/Output/RS-232/RS-422 port	RS-232 (600-115,200 bps)*2 Cable length: 10 m max. RS-422 (full duplex) (600-115,200 bps)*2 Cable length: 500 m max.*6
	Maintenance port (USB port)	USB2.0 (Full-speed) 12 Mbps (Virtual COM)
Certified standards		UL/c-UL Listing*1, FCC (Verification),, ICES-003 (self declared), CE marking (self declared), VCCI (Report of Compliance)

*1 If you use this product as UL Listing product, you shall use only a Listed Power Supply with an output rated maximum 24 V DC, 8 A, 100 VA and marked LPS or NEC Class 2.

*2 Ethernet, RS-232, and RS-422 are mutually exclusive, only one of three can be used at the same time.

*3 Default setting (Scanner port) : Baud rate 9,600bps, data size 8bits, 1 stop bit, even parity bit, no flow control

*4 Default setting: TCP server port 3000, IP address 192.168.1.100, Subnet mask 255.255.255.0

*5 The PoE input is intended for intra-building use only.
And the PoE is set Class 0. The power consumption can be changed with which scanner to use.

*6 When using a cable of 30m long or more, use a shielded cable and connect the shield to F.E.

5. 2 Dimensional outline drawings

• Communication Unit (WB9Z-CU100)

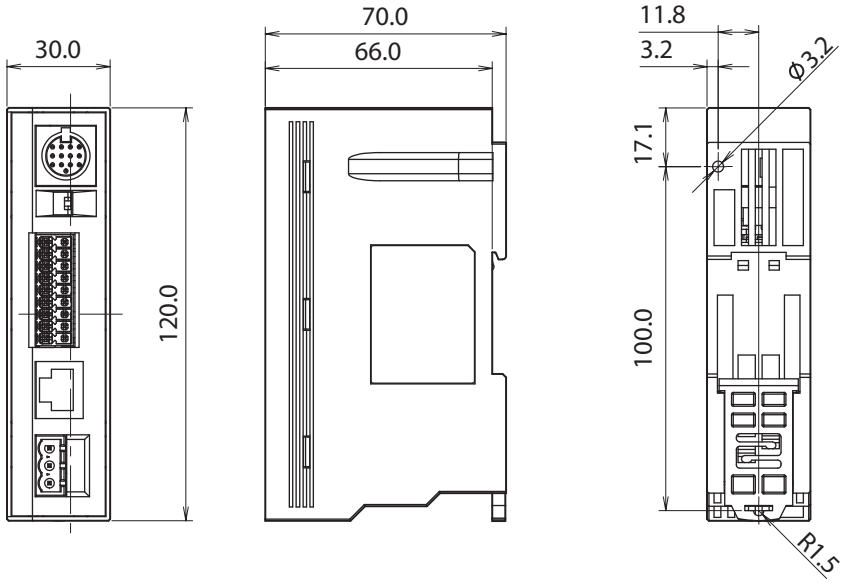

Unit: mm

5. 3 Troubleshooting

When using the communication unit, if an operation occurs that you think is a problem, read the following problems and items to check to resolve the problem.
If you cannot resolve the problem, contact your local dealer or customer service.

Problem	Items to check
Power does not turn on (Display LED (5 V DC) does not light up)	• Does the Ethernet hub in use support PoE? • Is the 24 V DC power supply properly connected to +/-?
Power does not turn off (Display LED (5 V DC) does not turn off)	• Have you shut off all three power supplies? (External power supply/PoE/USB)
Operation is not stable	• Is the power supplied from Ethernet port or other power port? (Power supply from the maintenance port (USB port) can be used only for the maintenance purpose.)
Setting value is not reflected	• After performing setting change or storing operation, is the power turned ON/OFF correctly? • Is the status of the operation changeover switch correct?
RS-232/RS-422 communication is not working	• Is the RS-232 communication setting correct? • Is the wiring correct?
Ethernet communication failure	• Are the various Ethernet settings correct?
USB communication is not working	• Has the device driver installed? • Does the computer recognize the communication unit? • Are you selecting the port to which the communication unit is?
Input/Output terminal not working	• Is the connection correct?
External output not working	• Is the wiring correct?

5. 4 List of Control Commands

No.	Name	Control Command			Description
		Prefix	Mnemonic	Suffix	
1	Reset (after 10 seconds)	^	reset10	CR LF	Executes a reset after 10 seconds.
2	Reset (after 5 seconds)	^	reset5	CR LF	Executes a reset after 5 seconds.
3	Reset (after 1 second)	^	reset	CR LF	Executes a reset after 1 second.
4	Load setting value	^	load	CR LF	Loads the setting values from the currently selected setting value region (non-volatile memory).
5	Save setting value	^	save	CR LF	Saves the setting values to the currently selected setting value region (non-volatile memory).
6	Set initial value	^	iNiTiAl	CR LF	Resets all setting values to the factory defaults.
7	Get version	^	ver	CR LF	Gets the version of the firmware. e.g. Response when getting the version **^WB9Z-CU100/A-001.000.00/B-001.000.00** CR LF For details, refer to [5. 5 Control Commands (Details)] on page 5-5.
8	Acquire communication setting (present value)	^	comgetc	CR LF	Gets the RS-232 interface communication settings. (Currentvalue) e.g. Response when getting the current values of the communication settings. **^07,01,01,00,00/00,00,00,00/5e,00,00,00/0d,0a,00,00** CR LF (^ Baud rate, data length, parity, stop bits, flow control/reserved 4/reserved 4/reserved 4 CR LF) For details, refer to [5. 5 Control Commands (Details)] on page 5-5.
9	Acquire communication setting (memory value)	^	comgetm	CR LF	Gets the RS-232 interface communication settings. (The setting values applied at startup) e.g. Response when getting the communication settings applied at startup. **^07,01,01,00,00/00,00,00,00/5e,00,00,00/0d,0a,00,00** CR LF (^ Baud rate, data length, parity, stop bits, flow control/4 reserved/4 reserved/4 reserved CR LF) For details, refer to [5. 5 Control Commands (Details)] on page 5-5.
10	Get MAC address	^	netmac	CR LF	Get the MAC address.
11	Get IP address	^	netipa	CR LF	Get the IP address.
12	Get Subnet mask	^	netmask	CR LF	Get the Subnet mask.
13	Get Default gateway	^	netgway	CR LF	Get the Default gateway.

5. 5 Control Commands (Details)

• No.7 Get version

Response Example

Prefix	Model Number	Separator	Main Application Version	Separator	Boot Loader Version	Suffix
^	**WB9Z-CU100**	**/**	**A-001.000.00**	**/**	**B-001.000.00**	CR LF

WB9Z-CU100 will be entered for model number.

The main application version is the numeric values in the format 3-digit. 3-digit. 2-digit that follow A- which indicates the main application.

The bootloader version is the numeric values in the format 3-digit. 3-digit. 2-digit that follow B- which indicates the bootloader.

• No. 8 Acquire communication setting (present value), No. 9 Acquire communication setting (memory value)

Response Example

Prefix	RS-232 setting					Separator
	Communication speed	Data length	Parity	Stop bits	Flow control	
^	**03,**	**01,**	**01,**	**00,**	**00**	**/**

Reserved				Separator
00,	**00,**	**00,**	**00**	**/**

Reserved				Separator
5e,	**00,**	**00,**	**00**	**/**

Reserved				Suffix
0d,	**0a,**	**00,**	**00**	CR LF

For the RS-232 settings, the setting value of [RS-232 setting] on page 3-9 in [3. 4 Setting Item List] is entered.

5.6 ASCII Code Table

Character	Decimal	Hexadecimal	Binary
NUL	0	00	00000000
SOH	1	01	00000001
STX	2	02	00000010
ETX	3	03	00000011
EOT	4	04	00000100
ENQ	5	05	00000101
ACK	6	06	00000110
BEL	7	07	00000111
BS	8	08	00001000
HT	9	09	00001001
LF / NL	10	0A	00001010
VT	11	0B	00001011
FF / NP	12	0C	00001100
CR	13	0D	00001101
SO	14	0E	00001110
SI	15	0F	00001111
DLE	16	10	00010000
DC1	17	11	00010001
DC2	18	12	00010010
DC3	19	13	00010011
DC4	20	14	00010100
NAK	21	15	00010101
SYN	22	16	00010110
ETB	23	17	00010111
CAN	24	18	00011000
EM	25	19	00011001

Character	Decimal	Hexadecimal	Binary
SUB	26	1A	00011010
ESC	27	1B	00011011
FS	28	1C	00011100
GS	29	1D	00011101
RS	30	1E	00011110
US	31	1F	00011111
(SP)	32	20	00100000
!	33	21	00100001
"	34	22	00100010
#	35	23	00100011
$	36	24	00100100
%	37	25	00100101
&	38	26	00100110
'	39	27	00100111
(	40	28	00101000
)	41	29	00101001
*	42	2A	00101010
+	43	2B	00101011
,	44	2C	00101100
-	45	2D	00101101
.	46	2E	00101110
/	47	2F	00101111
0	48	30	00110000
1	49	31	00110001
2	50	32	00110010
3	51	33	00110011
4	52	34	00110100
5	53	35	00110101
6	54	36	00110110
7	55	37	00110111
8	56	38	00111000
9	57	39	00111001
:	58	3A	00111010

Character	Decimal	Hexadecimal	Binary
;	59	3B	00111011
<	60	3C	00111100
=	61	3D	00111101
>	62	3E	00111110
?	63	3F	00111111
@	64	40	01000000
A	65	41	01000001
B	66	42	01000010
C	67	43	01000011
D	68	44	01000100
E	69	45	01000101
F	70	46	01000110
G	71	47	01000111
H	72	48	01001000
I	73	49	01001001
J	74	4A	01001010
K	75	4B	01001011
L	76	4C	01001100
M	77	4D	01001101
N	78	4E	01001110
O	79	4F	01001111
P	80	50	01010000
Q	81	51	01010001
R	82	52	01010010
S	83	53	01010011
T	84	54	01010100
U	85	55	01010101
V	86	56	01010110
W	87	57	01010111
X	88	58	01011000
Y	89	59	01011001
Z	90	5A	01011010
[	91	5B	01011011
\	92	5C	01011100
]	93	5D	01011101
^	94	5E	01011110
_	95	5F	01011111
`	96	60	01100000
a	97	61	01100001
b	98	62	01100010

Character	Decimal	Hexadecimal	Binary
c	99	63	01100011
d	100	64	01100100
e	101	65	01100101
f	102	66	01100110
g	103	67	01100111
h	104	68	01101000
i	105	69	01101001
j	106	6A	01101010
k	107	6B	01101011
l	108	6C	01101100
m	109	6D	01101101
n	110	6E	01101110
o	111	6F	01101111
p	112	70	01110000
q	113	71	01110001
r	114	72	01110010
s	115	73	01110011
t	116	74	01110100
u	117	75	01110101
v	118	76	01110110
w	119	77	01110111
x	120	78	01111000
y	121	79	01111001
z	122	7A	01111010
{	123	7B	01111011
|	124	7C	01111100
}	125	7D	01111101
~	126	7E	01111110
DEL	127	7F	01111111

[ ] indicates a control character.
(SP) indicates a space character.
The other characters indicate graphic characters.

5. 7 Installing the USB driver

Prior to using the maintenance port to connect the unit to a computer, the USB device driver must be installed.
The USB driver is made available on the IDEC website. Please download and install the latest USB driver from the IDEC website.
For details on the USB driver, refer to the included documentation.

Index

Revision history

Edition	Published	Revised content	
		Page	Points
1st	2017.5		

Communication Unit Supporting Code Scanner WB9Z-CU100

User's Manual

- B-1964(0)
- Published: May 2017 1st edition
- 6-64, Nishi-Miyahara 2-Chome, Yodogawa-ku, Osaka, Japan

IDEC CORPORATION

IDEC CORPORATION

www.idec.com

Head Office
6-64, Nishi-Miyahara-2-Chome, Yodogawa-ku, Osaka 532-0004, Japan

USA	IDEC Corporation	Tel: +1-408-747-0550	opencontact@idec.com	**Hong Kong**	IDEC Izumi (H.K.) Co., Ltd.	Tel: +852-2803-8989	info@hk.idec.com
Australia	IDEC Australia Pty. Ltd.	Tel: +61-3-8523-5900	sales@au.idec.com	**China/Shanghai**	IDEC (Shanghai) Corporation	Tel: +86-21-6135-1515	idec@cn.idec.com
Germany	IDEC Electrotechnik GmbH	Tel: +49-40-25 30 54 - 0	service@eu.idec.com	**China/Shenzen**	IDEC (Shenzen) Corporation	Tel: +86-755-8356-2977	idec@cn.idec.com
Singapore	IDEC Izumi Asia Pte. Ltd.	Tel: +65-6746-1155	info@sg.idec.com	**China/Beijing**	IDEC (Beijing) Corporation	Tel: +86-10-6581-6131	idec@cn.idec.com
Thailand	IDEC Asia (Thailand) Co., Ltd	Tel: +66-2-392-9765	sales@th.idec.com	**Japan**	IDEC Corporation	Tel: +81-6-6398-2527	marketing@idec.co.jp
Taiwan	IDEC Taiwan Corporation	Tel: +886-2-2698-3929	service@tw.idec.com				

B-1964(0) MAY 2017

IDEC CORPORATION

B-1964(0)